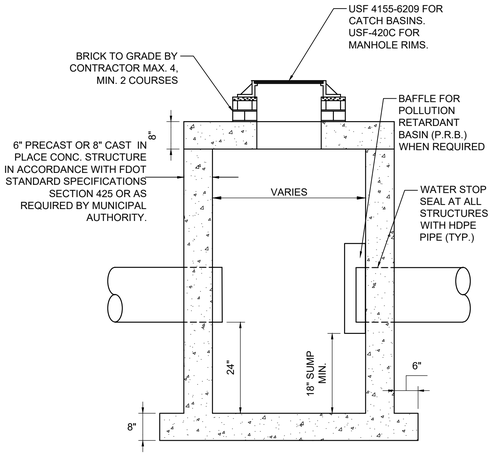

NOTES:
1. STRUCTURE MANUFACTURER AND/OR CONTRACTOR SHALL CONFIRM ALL STEEL REINFORCEMENT MEETS FDOT STANDARDS PER INDEX 425-010, SECTION 415 AND 425 PRIOR TO SUBMITTING ANY SHOP DRAWINGS FOR APPROVAL.
2. LOCKING GRATES TO BE PROVIDED.

5 CATCH BASIN / DRAINAGE MANHOLE DETAIL

NOT TO SCALE

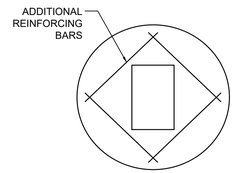

PLAN VIEW
TOP SLAB
FOR CATCH BASINS

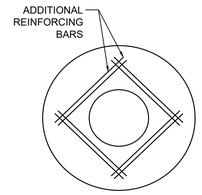

PLAN VIEW
TOP SLAB
FOR MANHOLES

6 CATCH BASIN / MANHOLE FRAME DETAIL

NOT TO SCALE

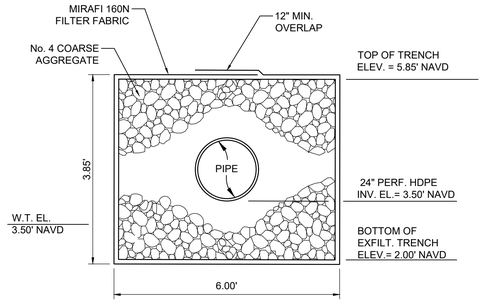

7 EXFILTRATION TRENCH DETAIL

NOT TO SCALE

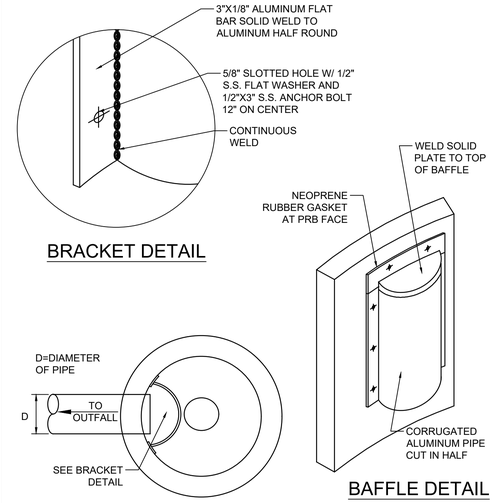

NOTE:
BAFFLE TO BE A SECTION OF CAP CUT IN HALF.
CAP FOR BAFFLE SHALL BE THE NEXT STANDARD PIPE DIAMETER LARGER THAN THE INFLOW/ OUTFLOW PIPE.

8 POLLUTION RETARDANT BAFFLE DETAIL

NOT TO SCALE

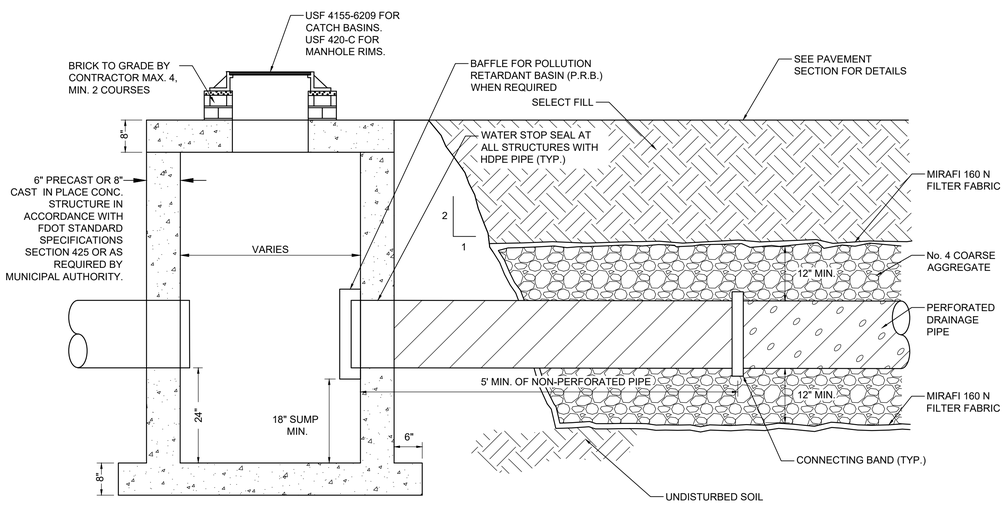

9 CATCH BASIN W/ PRB AND EXFILTRATION TRENCH

NOT TO SCALE

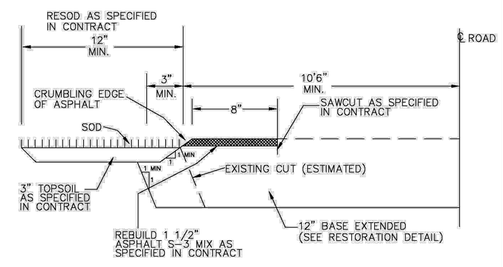

EDGE OF PAVEMENT RESTORATION

ENGINEERING STANDARDS 2025

REVISIONS		ENGINEERING DIVISION CITY OF POMPANO BEACH	EDGE OF PAVEMENT RESTORATION	
BY	DATE			DATE: MAY 2022
		SCALE: N.T.S.		DWG. NO. 306-4

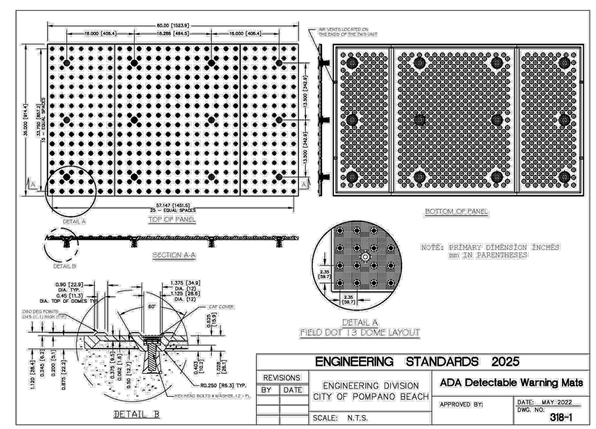

ENGINEERING STANDARDS 2025

REVISIONS		ENGINEERING DIVISION CITY OF POMPANO BEACH	ADA Detectable Warning Mats	
BY	DATE		APPROVED BY:	DATE: MAY 2022
		SCALE: N.T.S.		DWG. NO. 318-1

KEITH
301 East Atlantic Blvd.
Pompano Beach, FL 33060
PH: (954) 788-3400
Florida Engineering Business License: CA7928
Florida Surveyor and Mapper Business License: LB6860
Florida Landscape Architecture Business License: LC26000457

REVISIONS

NO.	DESCRIPTION	DATE

PRELIMINARY PLAN NOT FOR CONSTRUCTION

THESE PLANS ARE NOT FULLY PERMITTED AND ARE SUBJECT TO REVISIONS MADE DURING THE PERMITTING PROCESS.

RESPONSIBILITY FOR THE USE OF THESE PLANS PRIOR TO OBTAINING PERMITS FROM ALL AGENCIES HAVING JURISDICTION OVER THE PROJECT WILL FALL SOLELY UPON THE USER.

ISSUE DATE:	03/11/2026
DESIGNED BY:	CA
DRAWN BY:	BN
CHECKED BY:	CA
BID-CONTRACT:	

This item has been digitally signed and sealed by **CHRISTOPHER T. ANDREONI, P.E.** on the date adjacent to the seal.

CHRISTOPHER T. ANDREONI LICENSE No. 84184 STATE OF FLORIDA PROFESSIONAL ENGINEER

Signature must be verified on any electronic copies.

2026.07.06 14:59:54 -04'00'

CHRISTOPHER T. ANDREONI, P.E.
FLORIDA REG. NO. 84184
(FOR THE FIRM)

CLIENT

RP POMPANO LLC

PROJECT

POMPANO BEACH CITY HALL & PARKING DECK

SHEET TITLE

PAVING, GRADING, AND DRAINAGE DETAILS

SHEET NUMBER **CP-502**

PROJECT NUMBER **15083.00**

STATUS: PRELIMINARY

Plotted by: dellas On 7/1/2026 6:05 PM

Drawing name: H:\15083.00 - Downtown Pompano - RP Development LLC\Engineering\Cadd\Phase I (infrastructure)\15083.00-CP-5XX-PH1.dwg

DRC
PZ26-12000001
08/05/2026